US008896242B2

(12) **United States Patent**
Flessas

(10) **Patent No.: US 8,896,242 B2**
(45) **Date of Patent: *Nov. 25, 2014**

(54) **ROBOTICALLY CONTROLLED ENTERTAINMENT ELEMENTS**

(71) Applicant: **Andrew Flessas**, Las Vegas, NV (US)

(72) Inventor: **Andrew Flessas**, Las Vegas, NV (US)

(*) Notice: Subject to any disclaimer, the term of this patent is extended or adjusted under 35 U.S.C. 154(b) by 0 days.

This patent is subject to a terminal disclaimer.

(21) Appl. No.: **13/745,945**

(22) Filed: **Jan. 21, 2013**

(65) **Prior Publication Data**

US 2013/0148038 A1 Jun. 13, 2013

Related U.S. Application Data

(63) Continuation of application No. 12/653,058, filed on Dec. 7, 2009, now Pat. No. 8,356,704, which is a continuation-in-part of application No. 12/455,638, filed on Jun. 3, 2009, now abandoned, which is a continuation of application No. 11/700,535, filed on Jan. 30, 2007, now Pat. No. 7,545,108.

(60) Provisional application No. 60/763,669, filed on Jan. 31, 2006.

(51) **Int. Cl.**

H02P 1/54	(2006.01)
H04N 9/31	(2006.01)
G06F 1/16	(2006.01)
G06F 3/01	(2006.01)

(52) **U.S. Cl.**

CPC ***H04N 9/3141*** (2013.01); ***G06F 1/1601*** (2013.01); ***G06F 3/011*** (2013.01); ***G06F 3/016*** (2013.01); *Y10S 901/50* (2013.01)

USPC **318/101**; 318/568.25; 901/50

(58) **Field of Classification Search**

CPC B25J 9/0087

USPC 318/101, 568.25

See application file for complete search history.

(56) **References Cited**

U.S. PATENT DOCUMENTS

4,868,473	A	9/1989	Kato	
5,078,021	A	1/1992	Freywiss	
5,413,454	A *	5/1995	Movsesian	414/729
5,448,225	A	9/1995	Maignon et al.	
5,496,086	A	3/1996	Adrian et al.	
5,628,660	A	5/1997	Onitsuka	
5,652,849	A	7/1997	Conway et al.	
5,683,068	A	11/1997	Chase et al.	
5,708,527	A	1/1998	Adamson et al.	
5,773,984	A	6/1998	Suyama et al.	
5,909,998	A	6/1999	Herbermann et al.	
5,947,429	A	9/1999	Sweere et al.	

(Continued)

FOREIGN PATENT DOCUMENTS

JP	2000-267579	9/2000
KR	10-2004-0096097	11/2004

Primary Examiner — Joseph Dillon, Jr.

(74) *Attorney, Agent, or Firm* — Weide & Miller, Ltd.

(57) **ABSTRACT**

A robotic mount is configured to move an entertainment element such as a video display, a video projector or a staircase. The robotic mount is movable in three-dimensions, whereby the associated entertainment element is moveable in three-dimensional space. In one embodiment, a unitary display comprises a plurality of closely spaced individual displays which are mounted to robotic mounts, whereby the configuration of the unitary display may be altered by changing the position of one or more of the displays relative to the others.

6 Claims, 5 Drawing Sheets

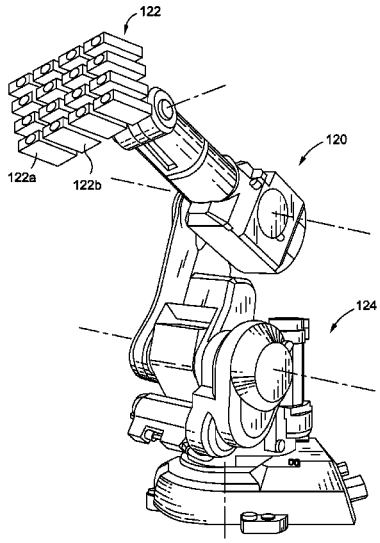

(56) **References Cited**

U.S. PATENT DOCUMENTS

6,046,711	A	4/2000	Kouchi	
6,085,670	A	7/2000	Genov	
6,095,476	A	8/2000	Mathis	
RE36,978	E	12/2000	Moscovitch	
6,212,784	B1	4/2001	Pittman	
6,328,206	B1	12/2001	Schanz et al.	
6,427,823	B1	8/2002	Ishikawa et al.	
6,437,973	B1	8/2002	Helot et al.	
6,507,163	B1 *	1/2003	Allen	318/560
6,655,645	B1	12/2003	Lu et al.	
6,708,940	B2	3/2004	Ligertwood	
6,807,461	B2	10/2004	Kneifel et al.	
6,826,963	B2	12/2004	Liu et al.	
6,914,622	B1	7/2005	Smith et al.	
7,022,962	B2	4/2006	Ohtomo et al.	
7,043,335	B2	5/2006	Yoshida et al.	
7,092,001	B2 *	8/2006	Schulz	348/14.05
7,123,285	B2	10/2006	Smith et al.	
7,154,526	B2	12/2006	Foote et al.	
7,163,249	B2	1/2007	Schmidt et al.	
7,296,774	B2	11/2007	Oh	
7,414,603	B2	8/2008	Tseng	
7,463,821	B2	12/2008	DiFrancesco et al.	
7,500,550	B2	3/2009	Strong et al.	
7,545,108	B2 *	6/2009	Flessas	318/101
7,559,766	B2	7/2009	Epley et al.	
7,576,830	B2	8/2009	DiFrancesco	
7,682,357	B2	3/2010	Ghodoussi et al.	
7,719,222	B2	5/2010	Theobald	
7,720,570	B2	5/2010	Close et al.	
8,356,704	B2 *	1/2013	Flessas	198/322
2003/0089267	A1	5/2003	Ghorbel et al.	
2003/0135203	A1	7/2003	Wang et al.	
2003/0144649	A1	7/2003	Ghodoussi et al.	
2004/0066612	A1	4/2004	Yu	
2004/0199290	A1	10/2004	Stoddard et al.	
2004/0202445	A1	10/2004	DiFrancesco	
2004/0249507	A1	12/2004	Yoshida et al.	
2005/0038416	A1	2/2005	Wang et al.	
2005/0110867	A1 *	5/2005	Schulz	348/14.05
2005/0219356	A1	10/2005	Smith et al.	
2006/0061124	A1	3/2006	Schmidt et al.	
2006/0074525	A1	4/2006	Close et al.	
2006/0184272	A1	8/2006	Okazaki et al.	
2007/0064092	A1	3/2007	Sandbeg et al.	
2007/0086155	A1	4/2007	Chen et al.	
2007/0177339	A1 *	8/2007	Flessas	361/681
2008/0158801	A1	7/2008	Mathews	
2009/0237873	A1	9/2009	Flessas	
2010/0140046	A1 *	6/2010	Flessas	198/321
2010/0145512	A1	6/2010	Flessas	
2014/0025202	A1 *	1/2014	Umeno et al.	700/253
2014/0031983	A1 *	1/2014	Low et al.	700/257
2014/0102239	A1 *	4/2014	Umeno	74/490.01

* cited by examiner

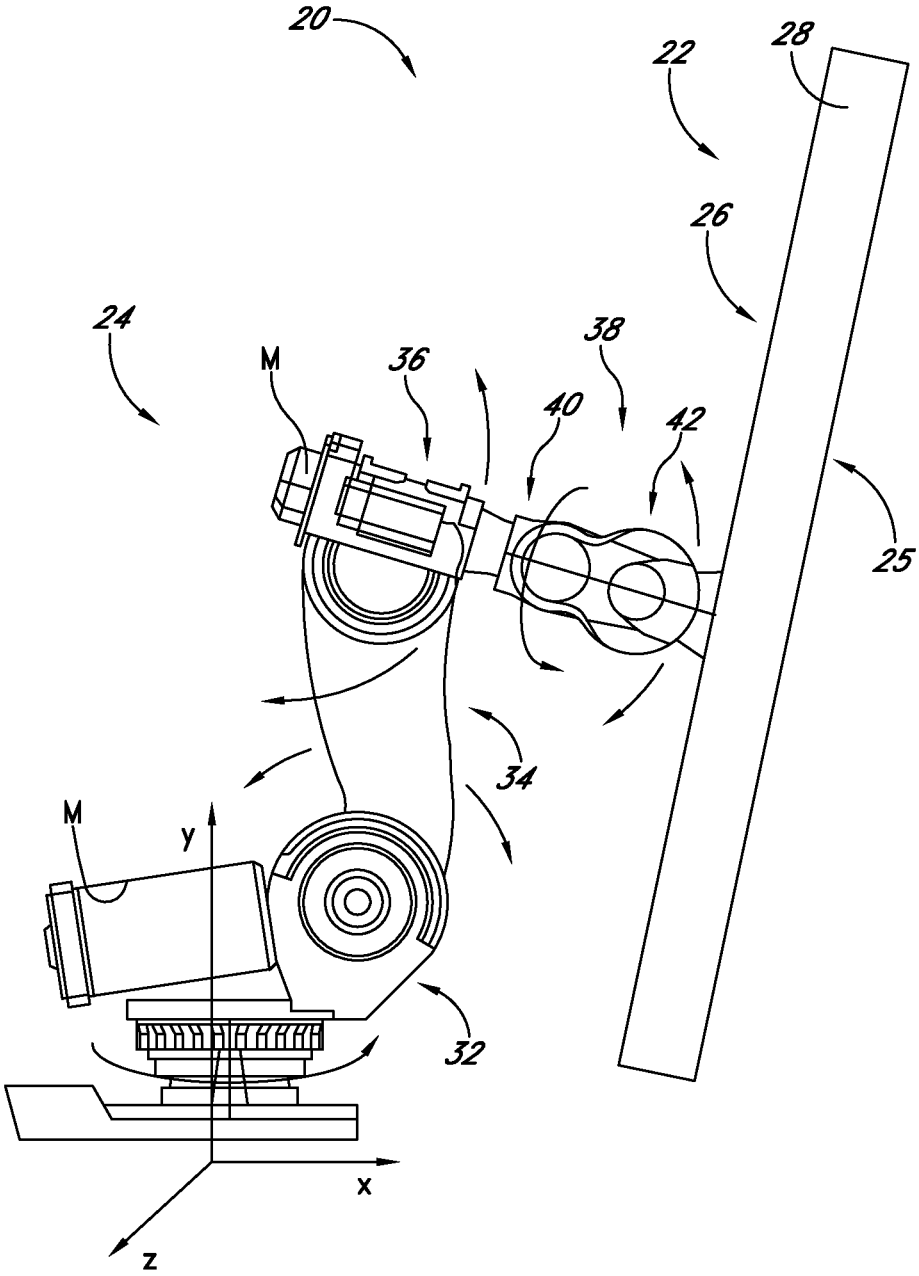

FIG. 1

FIG. 2

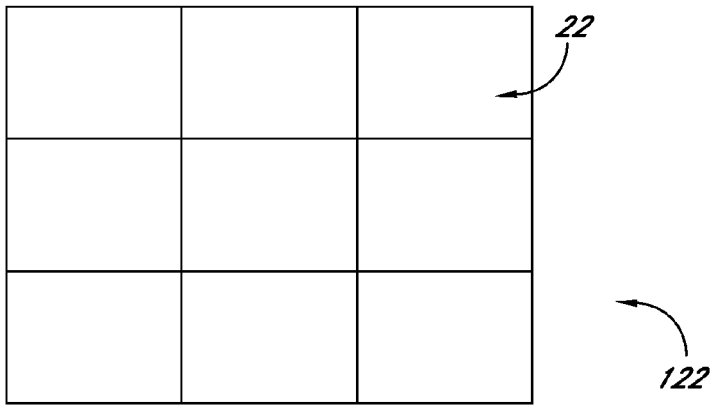

FIG. 3

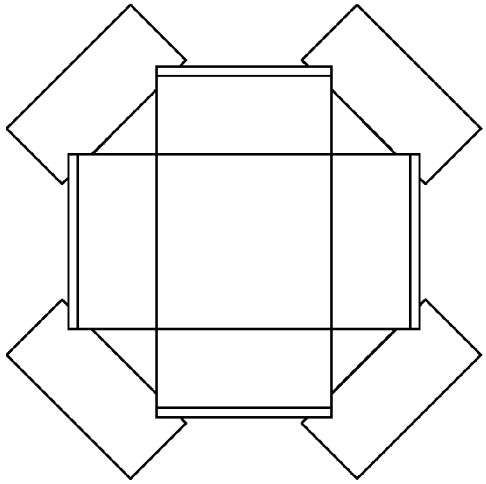

FIG. 4

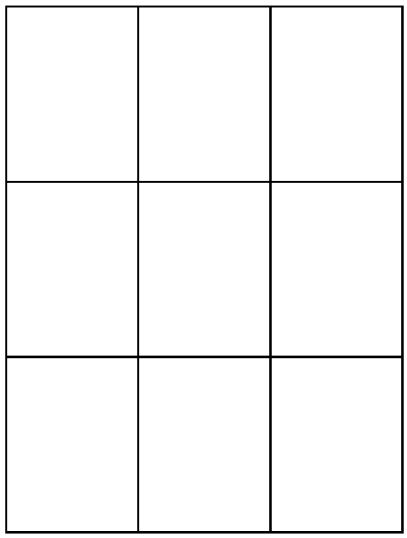

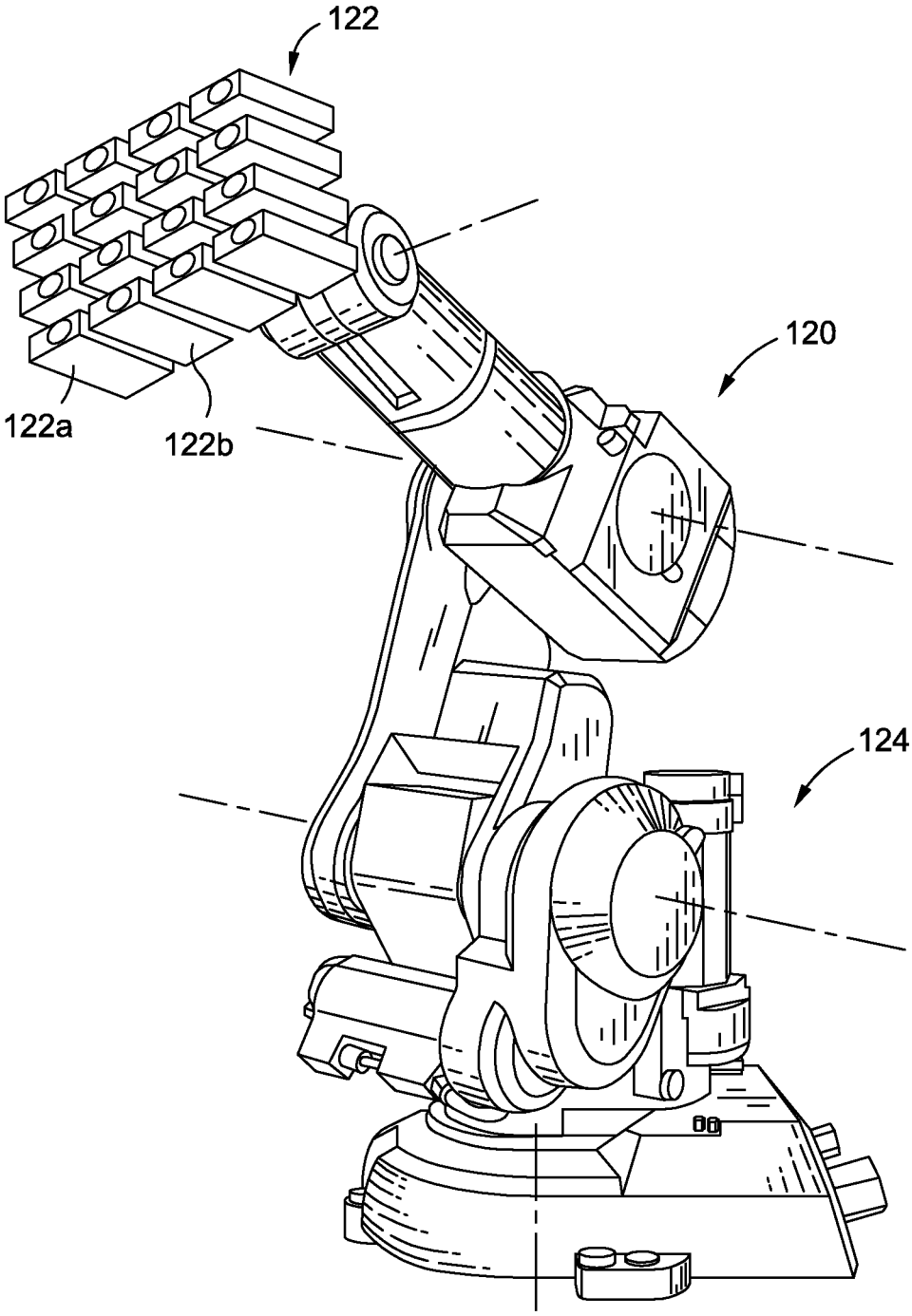

FIG. 5

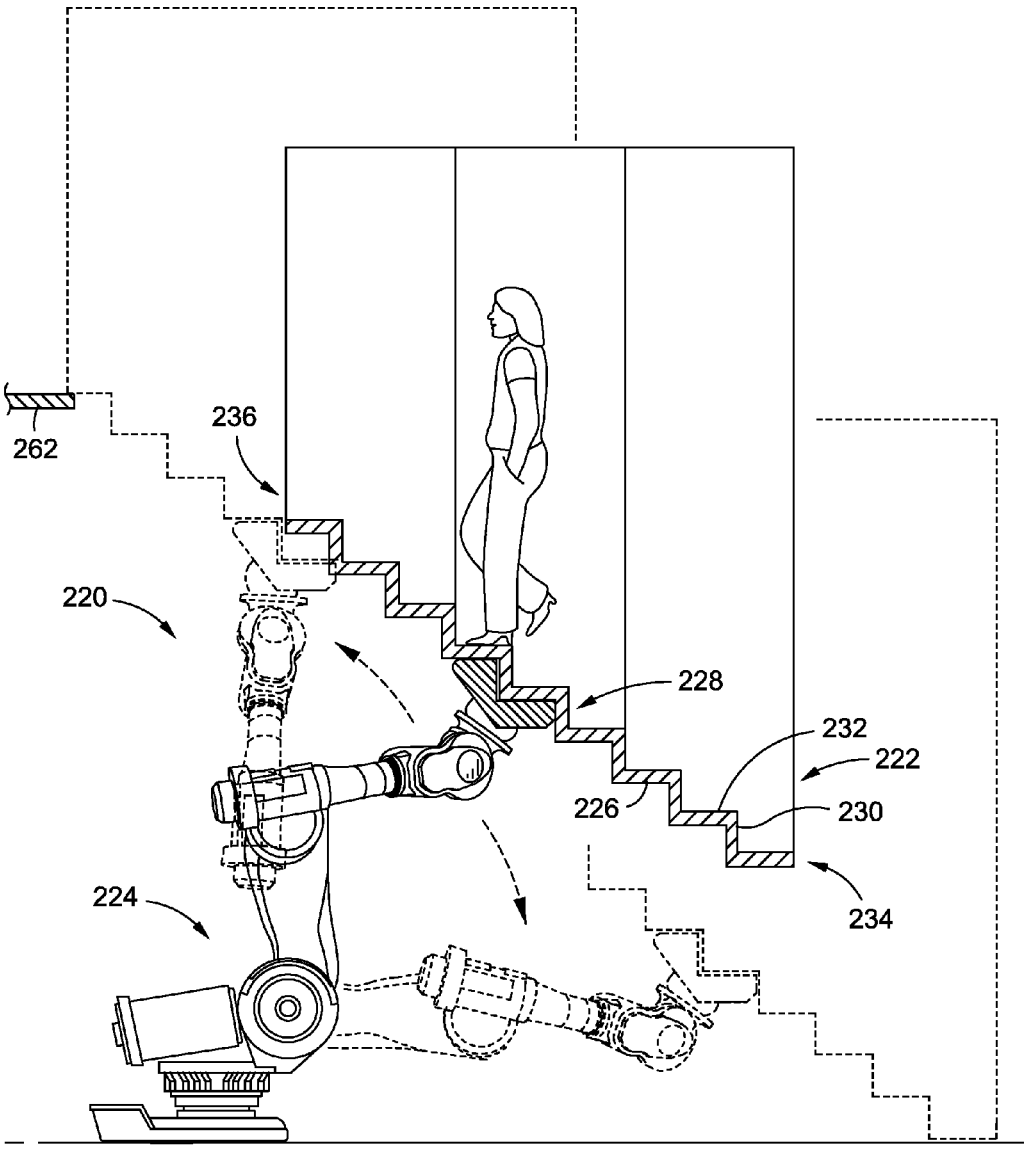

FIG. 6

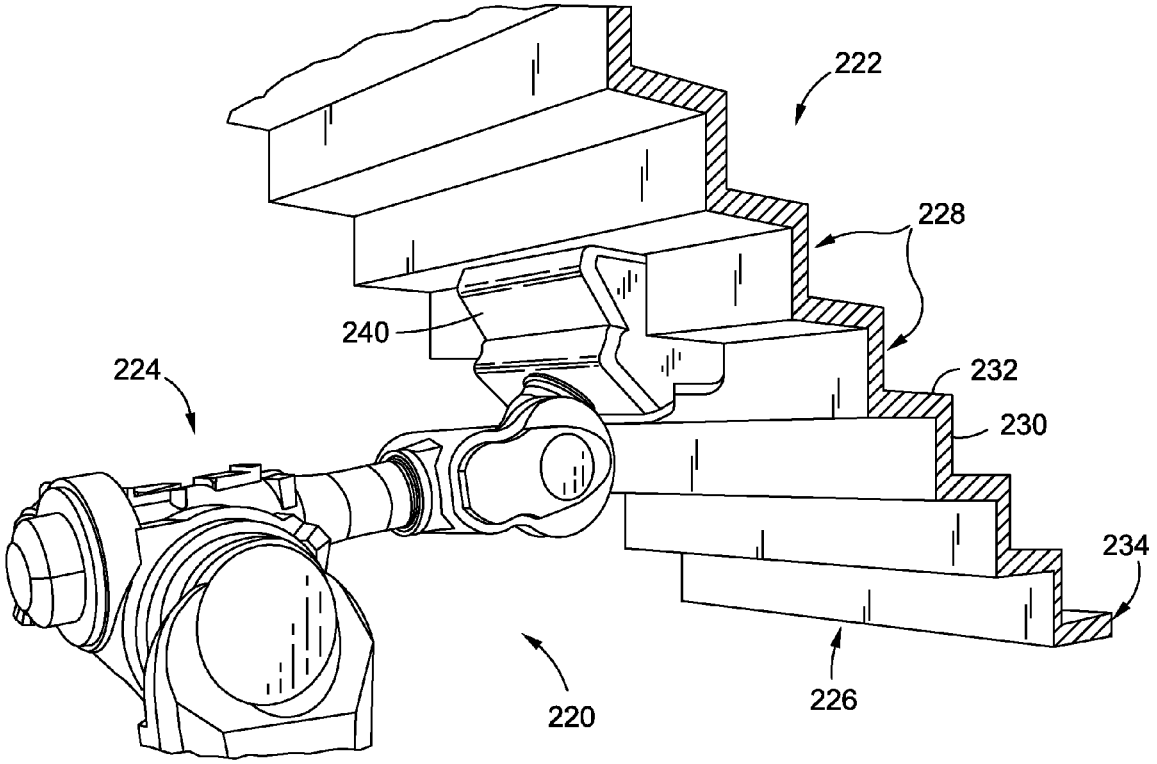

FIG. 7

ROBOTICALLY CONTROLLED ENTERTAINMENT ELEMENTS

RELATED APPLICATION DATA

This application is a continuation of U.S. application Ser. No. 12/653,058, filed Dec. 7, 2009, now U.S. Pat. No. 8,356,704, which is a continuation-in-part of U.S. application Ser. No. 12/455,638, filed Jun. 3, 2009, now abandoned, which is a continuation of U.S. application Ser. No. 11/700,535, filed Jan. 30, 2007, now U.S. Pat. No. 7,545,108, which claims priority to U.S. Provisional Patent Application Ser. No. 60/763,669 filed Jan. 31, 2006.

FIELD OF THE INVENTION

The present invention relates to the movement of entertainment elements.

BACKGROUND OF THE INVENTION

A wide variety of devices are used for entertainment purposes. For example, electronic displays are now extremely common and are utilized in a variety of environments. Such displays were initially used primarily in television sets and to with computers. Initially, these displays were primarily CRT type displays which were large and bulky.

In recent years, other display technologies have been developed. Plasma, LCD, LED and other types of displays are now commercially producible in large display sizes. At the same time, however, these displays are generally thin, thus taking up much less space than CRT type displays offering the same display area.

As such, these displays are now utilized for a variety of purposes. For example, large displays are used at stadiums to present replays of sporting events. These types of displays are also sometimes mounted to walls in stores to present advertising information.

In order to attract attention to advertising, graphic information may be presented on the displays. This information may comprise exciting patterns, such as in bright colors, flashing effects and the like, to draw attention to the display. Still, these displays may be overlooked and advertisers and other users of these displays continue to seek new ways to use these displays and increase their viewership.

Other types of entertainment devices may be used in other settings. For example, in a theatrical production, large props may be located on a stage. The props may be moved into various positions to create different scenes and various actions. The props are often moved manually, such as with ropes and pulleys, limiting the situations where they may be used or their effectiveness.

SUMMARY OF THE INVENTION

The invention comprises moveable entertainment elements and methods of moving one or more entertainment elements.

One embodiment of the invention is a robotic mount. The robotic mount is configured to support one or more entertainment elements and move the one or more entertainment elements in at least two dimensions or directions, and preferably in three-dimensions. In one embodiment, the robotic mount comprises a base and a movable support. The base supports the display support, such as by resting upon a support surface or by connection to a support, such as a wall or other element.

The moveable support is movable in at least two, and preferably three, dimensions, or directions whereby one more

entertainment elements connected thereto are so movable. In one embodiment, the moveable support comprises a plurality of members which are movably connected to one another in one more directions/dimensions. The moveable support may comprise, for example, a robotic arm having a base, a main support which is rotatable relative to the base, a lower arm which is rotatable relative to the main support, an upper arm which is rotatable relative to the lower arm, and a head to which the one or more entertainment elements are connected, the head movable relative to the upper arm.

In one embodiment, means are provided for moving the moveable support. Preferably, the means permits the moveable mount to be "automated" in the sense that it can be moved without direct physical contact by a human therewith. This means may comprise one or more electric motors or the like.

One aspect of the invention is a robotically controlled electronic display. The robotically controlled electronic display preferably comprises a robotic mount which supports and moves one or more electronic displays. The electronic displays may comprise, for example, flat panel electronic video displays.

In another embodiment of the invention, a unitary display may comprise two or more individual displays. One or more robotic mounts may be utilized to move one or more or all of the displays of the unitary display. For example, each display of a unitary display comprising a plurality of displays may be associated with its own robotic mount, thus permitting all of the displays of the unitary display to be moved independently and/or synchronously.

Another aspect of the invention comprises a robotically controlled video projector. The robotically controlled video projector comprises a robotic mount which support and moves one or more video projectors. The video projectors may comprise, for example, CRT or DLP type electronic video projectors. The robotic mount may move the one or more projectors to cause then to display information, images, moving images or the like upon various display surfaces such as screens, walls or floors.

Yet another aspect of the invention comprises a robotically controlled staircase. The robotically controlled staircase comprises a robotic mount which supports and moves a staircase. The staircase preferably defines one or more steps from a bottom end to a top end. The robot mount is preferably configured to move the staircase in three-dimensional space, such as from ground level to one or more raised platforms.

One embodiment of the invention is a system including a robotic mount and a controller. The controller may be configured to accept input from a user and/or run control programs for generating instructions or output signals which may be used to control the robotic mount and its associated entertainment element (such as its associated video display(s), video projector(s) or staircase). In one embodiment, such a controller may also be configured to control information displayed by the one or more video displays or video projectors, including synchronizing the movement thereof with the images displayed thereby.

Further objects, features, and advantages of the present invention over the prior art will become apparent from the detailed description of the drawings which follows, when considered with the attached figures.

DESCRIPTION OF THE DRAWINGS

FIG. **1** is a side view of a robotically controlled electronic display in accordance with an embodiment of the invention;

FIG. **2** illustrates a robotically controlled unitary display comprising a plurality of individual displays in accordance with another embodiment of the invention;

FIG. **3** illustrates the unitary display of FIG. **2** with various of the individual displays moved into different positions;

FIG. **4** illustrates the unitary display of FIG. **2** with the individual displays moved into different positions;

FIG. **5** illustrates a robotically controlled video projector in accordance with an embodiment of the invention; and

FIGS. **6** and **7** illustrate a robotically controlled staircase in accordance with an embodiment of the invention.

DETAILED DESCRIPTION OF THE INVENTION

In the following description, numerous specific details are set forth in order to provide a more thorough description of the present invention. It will be apparent, however, to one skilled in the art, that the present invention may be practiced without these specific details. In other instances, well-known features have not been described in detail so as not to obscure the invention.

In general, the invention comprises one or more robotically-controlled objects and objects which are moved by one or more robots, such as electronic displays or projectors or a staircase. One embodiment of the invention is a robotically controlled electronic display and methods of using robotically controlled electronic displays, such as methods of moving one or more electronic displays of a group of displays. Another embodiment is a robotically controlled video projector and methods of using robotically controlled projectors to display images. Yet another embodiment of the invention is a robotically controlled staircase and methods of moving a staircase using one or more robots.

FIG. **1** illustrates a robotically controlled electronic display **20** in accordance with an embodiment of the invention. As illustrated, the robotically controlled electronic display **20** comprises at least one electronic display **22** and a robotic or moveable display mount **24**. In a preferred embodiment, the electronic display **22** is a thin-panel type display, such as an LCD, LED, plasma or similar display (whether now known or later developed). In one embodiment, the electronic display **22** has a front or viewing side **25** and an opposing rear side **26**. The electronic display **22** has a peripheral edge **28**.

In one embodiment, the electronic display **22** is generally rectangular in shape, but the display **22** may have a variety of shapes. The electronic display **22** may have a display area at the front side **25**, which display area is enclosed by a bezel, frame or the like. The display area comprises the portion of the electronic display **22** which is capable of displaying information.

In a preferred embodiment, the electronic display **22** is relatively large, such as for viewing by person situation remotely there from. The electronic display **22** may be 20 inches in diagonal size (of display area), more preferably at least 36 inches in diagonal size, and even more preferably a least 50-60 inches or more in diagonal size.

The electronic display **22** is supported by the robotic mount **24**. In a preferred embodiment, the robotic display mount **24** is moveable, thus permitting the position of the electronic display **22** to be changed. In a preferred embodiment, the robotic mount **24** is referred to as "robotic" because it is a device which can change positions without direct manual input. In particular, the robotic mount is preferably capable of multiple movements without manual intervention (i.e. move between various positions based upon a sequence of instructions without each movement being prompted by individual user input). Preferably, the robotic mount comprises a robot or robotic arm which can change the position of the display in at least two (2), and preferably three (3), dimensions or directions.

FIG. **1** illustrated one embodiment of a robotic mount **24**. In one embodiment, the robotic mount **24** comprises a base and a display support. The base is configured to connect or support the display mount and associated display to a support, and the display support is preferably movable relative to the base, thus permitting an associated display to be movable relative to the base and the associated support.

Referring to FIG. **1**, the base **30** may have a variety of configurations, including various shapes and sizes. In general, the base **30** is configured to be mounted to or supported by a support surface, such as a wall, floor or other support, such as a portion of another object. The base **30** may have a generally planar bottom or lower surface for engaging a generally planar support surface, or may have other configurations for engaging support surfaces of other shapes. In one embodiment, the base **30** may include one or more apertures for accepting fasteners which are placed into engagement with the support surface, for securing the base **30** in a fixed position by temporarily or permanently connecting the base **30** to that surface.

In a preferred embodiment, a movable support is positioned between the base **30** and the electronic display **22**. This support is preferably moveable in at least two (2), and more preferably three (3), dimensions. By "two" or "three-dimensions" it is preferably meant the standard Cartesian two or three-dimensional space, such that the support is capable of moving the display about, or relative to, at least two of an "x", a "y" and a "z" axis.

As illustrated, in one embodiment, the robotic arm includes a main support **32**. In one embodiment, the main support **32** is mounted for rotation relative to the base **30**, i.e. about the "y"-axis as illustrated in FIG. **1**. The main support **32** may be mounted, for example, on a bearing supported shaft which is connected to the base **30**, or by other means.

In one embodiment, a lower arm **34** is rotatably mounted to the main support **32**. As illustrated, the main support **32** has a first portion mounted to the base **30** and a second portion to which the lower arm **34** is mounted. In a preferred embodiment, the lower arm **34** is rotatably mounted to the main support **32** about a shaft or other mount. In the configuration illustrated, the lower arm **34** is mounted for rotation about a "z"-axis (i.e. an axis which is generally perpendicular to the axis about which the base **30** rotates).

As further illustrated, an upper arm **36** is rotatably mounted to the lower arm **34**. In one embodiment, a first or distal portion of the lower arm **34** is mounted to the main support **32**, and the upper arm **36** is mounted to a top or proximal portion of the lower arm **34**. In one embodiment, the upper arm **36** is also mounted for rotation about the "z" axis.

In one embodiment, a head **38** is located at a distal portion of the upper arm **36**. Preferably, the display **25** is mounted to the mount **24** via the head **38**. In one embodiment, the head **38** is mounted for rotation relative to the upper arm **36** (and thus the remainder of the mount **24**). In one configuration, a first portion **40** of the head **38** is mounted for rotation about an "x" axis relative to the upper arm **36** (i.e., about an axis which is perpendicular to both the "y" and "z" axes, and thus about an axis which is generally perpendicular to the axis about which the main support **32** and upper and lower arms **36**, **34** rotate).

Further, in the embodiment illustrated, a second portion **42** of the head **38** is mounted for rotation relative to the first portion **40** and the upper arm **36**, about the "z"-axis. As illustrated, the display **22** is mounted to the second portion **42** of the head **38**.

The various portions of the mount **24** may be connected to one another in a variety of fashions. For example, the various portions may be connected to one another via a shaft and bearing mount, where the shaft is connected to one component and engages one or more bearings supported by the other component, such that the shaft may move relative to the bearing(s), thus permitting the components to move relative to one another. The portions of the mount **24** might be mounted to one another in other fashions, however, such as by hinged mounting or the like.

Preferably, the mount **24** includes means for moving the one or more portions thereof, and thus the display **22** connected thereto. As illustrated, the mount **24** may include one or more motors M for moving the components thereof. The motors M may be electrical motors. In other embodiments, hydraulics or other means may be utilized to move one or more of the components of the mount **24**. For example, a hydraulic arm might be utilized to move the upper arm **36** relative to the lower arm **34** in an up and down direction.

In one embodiment, the display **22** may be detachably connected to the mount **24**, such as to permit the display **22** to be changed or serviced. The display **22** might be connected to a supporting frame, for example. That frame might then be connected to the mount **24**, such as by connecting the frame to the head **38** with one or more fasteners.

As indicated, in a preferred embodiment, the mount **24** is configured to move the display **22** in three-dimensions, or combinations thereof. The particular configuration of the mount **24** may vary for accomplishing this task. For example, while the mount **24** described above is "redundant" in its capacity to move in certain directions (i.e. the upper and lower arms **36**,**34** are both configured to move about the "z" axis), the mount **24** could be configured in other fashions (such as by having only a single portion configured to move in each direction). It will also be appreciated that the number of members or elements which the display mount comprises may vary. For example, the display mount might comprise a base and a head which is mounted to the based, such as via a swivel, permitting the head to be moved in at least two dimensions. Various configurations of members may also be utilized to effect movement in various directions. For example, aside from swivels or the rotating connections of the display mount illustrated in FIG. **1**, members may be configured to telescope, slide or otherwise move linearly (i.e. move along an axis rather than about an axis), or be configured to move along paths other than curved paths. For example, the mount **24** may be configured to move about the "x" axis, such as to permit the display to be tilted up and down, to move about the "y" axis, such as to permit the display to be swiveled from side to side, and to simply move along the "z" axis, such as to permit the display to be moved in and out (such as towards or away from a wall/viewer).

In the embodiment illustrated, a single display **22** is connected to a single mount **24**. In another embodiment of the invention, referring to FIG. **2**, a unitary display **122** may comprise a plurality of individual or independent displays **22** located in proximity to one another. In one embodiment, one or more of those individual displays **22** may be mounted to a mount **24**, and thus be configured for movement.

FIG. **2** illustrates one embodiment of a unitary display **122** comprising nine (9) displays **22**. All nine displays **22** are preferably mounted to an associated mount (not shown). In this manner, each of the nine displays **22** may be moved by their associated mount.

FIG. **2** illustrates the displays **22** in an orientation where they are located adjacent to one another in a matrix, and in a common plane. In the configuration illustrated, there is a central display surrounded by top, bottom, side and corner displays.

The displays **22** may be moved, however, to other locations and thus other orientations or positions relative to one another. For example, FIG. **3** illustrates the displays **22** in a "flower" configuration where the top, bottom and side displays are tilted forward relative to the plane which contains the central display. The corner displays are rotated and then similarly tilted inwardly. In this configuration, the displays are positioned like the slightly closed pedals of a rose or other flower.

FIG. **4** illustrates the displays **22** again arranged in a matrix and in a single plane. However, in this configuration, the displays **22** have all been rotated 90 degrees, so that the unitary display **122** is taller than wider.

In one embodiment, each display **22** of the unitary display **122** has an associated robotic mount. In this manner, each display **22** may be moved independently of the other. In another embodiment, multiple displays may be coupled to or otherwise associated with a single mount (such that groups of displays are movable together). In yet another embodiment, one or more of the displays **22** may be fixed and others may be connected to a mount **24** for movement.

In one embodiment, means may be provided for controlling a single mount (such as illustrated in FIG. **1**) or one or more or all of a plurality of mounts associated with a unitary display (such as illustrated in FIG. **2**). In one embodiment, one or more mounts may be controlled by a controller. The controller might comprise, for example, an electronically or mechanically operated controller.

In a preferred embodiment, the controller may comprise or include a computing device. Various instructions may be provided from the controller to the one or more robots/robotic mounts, causing the robots/robotic mounts to move. For example, a user might provide an input to the controller, which input is a request to move a particular display from a first to a second position. The controller may generate one more signals or instructions which are transmitted to the required mount for causing the mount to so move the display. The signal might comprise opening of a switch which allows electricity to flow to one or more motors for a predetermined period time which is necessary for the motor to effect the desired movement. In another embodiment, the signal might comprise an instruction which is received by sub-controller of the mount, which sub-controller then causes the mount to move as desired.

In one embodiment, the controller may be configured to cause a single mount or multiple mounts to move in various patterns or other desired directions. For example, the controller might be programmed to cause the displays to move in a particular pattern. Referring to FIGS. **2**-**4**, for example, the controller may be configured to move the displays from the position illustrated in FIG. **2** to that illustrated in FIG. **3** or **4**, or vice versa. The controller may be custom-programmed or might be configured to execute pre-set sequences of movement. For example, the displays may be configured to move at certain times, into certain positions or in certain patterns, to move with music or the like (such music might be presented via speakers associated with the display or via a separate sound system or the like).

In one embodiment, the controller may include a processing unit capable of executing machine readable code or "software." As indicated, that software may comprise a set of instructions which, when executed, cause the controller to move one or more displays in a predetermined motion or pattern, randomly or otherwise. The software might also or

instead simply comprise a set of instructions which permits a user to provide manual input to cause a display or displays to move, either in direct response thereto or to generate a "programmed" movement (which may be implemented immediately or be stored for implementation at a later time).

The controller might communicate with the robotic mount via wired or wireless communications. For example, the controller might comprise a desk-top computer running a control program. The desk-top computer might transmit signals via a RS-232 communication link including a wired pathway to the motor or controller of the robotic mount. Alternatively, the desk-top computer and display mount controller might both include wireless transceivers. In this manner, the controller and robotic mount(s) may be located remotely from one another. The same computer might output images or a video feed to the one or more displays.

In one embodiment, video information may be transmitted to the display or displays either independently of control instructions or dependently therewith. For example, the controller may be configured to both generate display information and/or transmit display information to the displays, and control the mounts. The controller might be configured to move the mounts/displays based upon the information which is displayed by the one or more displays. In one embodiment, the one or more displays may be moved synchronously with information displayed by the displays. For example, the displays might be moved synchronously with images displayed by the displays or with music or other accompanying information.

The invention has numerous advantages. One aspect of the invention is a movable display. The display may preferably be moved in three-dimensions (i.e. about three axes which are all perpendicular to one another). In one embodiment, the display is mounted to a display mount having a display support which is movable in three dimensions. Preferably, means are provided for automatically or remotely moving the display. As indicated, this may comprise changing the position of one or more portions of the robotic mount.

One aspect of the invention is a method of remotely or automatically changing the position of a display. For example, a display may be mounted to a wall or ceiling in a public area and the position of that display may be changed at various times in an automatic fashion (as opposed to "manual" manner, where the position is changed by a person physically moving the display or its associated mount). This has the advantage that the position of a display may be moved for various purposes, such as for entertainment, for optimizing viewing angle, for directing information to viewers in certain locations or areas, or for other reasons. The display might also be mounted to a wall of a home and be controlled by a user to change the viewing position of the display.

Another embodiment of the invention is a robotically controlled projector **120**. FIG. **6** illustrates one embodiment of a robotically controlled projector **120**. Preferably, the robotically controlled projector **120** comprises at least one projector **122** and at least one robotic mount **124**. The projector **122** may be of a variety of types now known or later developed. Preferably, the projector **120** is configured to project one or more images or a sequence of images (video) onto one or more surfaces. For example, the projector **120** might comprise a digital light processing ("DLP") projector, a CRT, LCD, or other type of projector. In one embodiment, the robotically controlled projector **120** includes a single projector. However, as illustrated, it might include a number of projectors **122***a*, **122***b*, etc.

The robotic mount **124** preferably comprises a robot or robotic arm similar to that described above and will thus not be described herein again in detail. In particular, the robotic mount **124** is configured to move the at least one projector **122** in at least two (2), and preferably three (3) dimensions. As also indicated above, the robotically controlled projector **120** may also include a controller. The controller may be configured to cause the projector **122** to display images or video at certain times, and may be configured to cause the robotic mount **124** to move the projector **122**, such as in certain paths.

The projector **122** is preferably mounted to the robotic mount **124**. The mount **124** may be used to move the projector **122**, thus causing the projector **122** to display images or video at various locations. For example, a robotically controlled projector **120** might be located in a lobby and be used to display various information or images upon a screen or another projection surface such as a wall, a floor or the like. The robotically controlled projector **120** might be used in a theater to project background images or the like.

It will be appreciated that, like the robotically controlled display described above, more than one robotically controlled projector **120** might be used in tandem. For example, two robotically controlled projectors **120** might each have a single projector **122**. The two robotically controlled projectors **120** may be configured to move in various patterns together or independent of one another, such as to show joint images, synchronous images or the like.

Of course, various other of the features of the robotically controlled display **20** described above may be applied to the robotically controlled projector **120**.

Yet another embodiment of the invention comprises a robotically controlled staircase **220**. FIGS. **6** and **7** illustrate a robotically controlled staircase **220**. The robotically controlled staircase **220** comprises a staircase **222** and a robot or robotic mount **224** which is configured to move the staircase **222**.

The staircase **222** may have various configurations. In one embodiment, the staircase **222** comprises a supporting body or structure **226**. The staircase **222** preferably includes a plurality of steps **228**. Each step **228** may comprise a riser **230** and a landing **232**. Each riser **230** preferably extends generally vertically upward. The number of steps **228**, and thus the number of risers **230**, may vary. Preferably, there is at least one step **228**. More preferably, however, there are a plurality of steps **228**. The depth of each landing **232** and the height of each riser **230** may be configured to conform to local building or other codes.

Preferably, the staircase **222** has a first or bottom end **234** and a second or top end **236**. The top end **236** is preferably higher than the bottom end **234**. The total change in elevation is dependent upon the number of steps **228** and the height of the risers **230**. The staircase **222** may be straight or it might be spiral, have one or more bends or the like.

In one embodiment, the staircase **222** may be configured to mate with one or more other elements or structures. For example, the staircase **222** may be configured to dock or mate to a supporting platform (not shown). To this end, the top end **236** and bottom end **234** of the staircase **222** may end or terminate in a landing **232**. This allows the top and bottom ends **236**,**234** to rest upon a supporting surface or platform at generally the same elevation thereof. In one embodiment, the landing at the top end **236** and/or bottom end **234** of the staircase **222** may be larger than the step landings **232**. For example, each of the top and bottom end landings may be sufficiently large to permit one more persons to easily stand thereon (whereas the step landings are primarily configured to permit a user to simply step thereon as they climb the staircase).

In one embodiment, the staircase **222** may include other features. For example, the staircase **222** may include one or more handrails (not shown). The staircase **222** has a width between opposing sides. This width may vary, such as being 36 or 48 inches, for example. A handrail may be located at each side of the staircase to prevent a user from falling off of the staircase and to provide support to users. Likewise, the landing **232** at the top end **236** and bottom end **234** of the staircase **222** may include an enclosure. Such an enclosure may be selectively opened and closed to permit ingress to and egress from the staircase, but prevent such during movement of the staircase. Such an enclosure might comprise a rail, a chain, or the like. For example, a swinging gate may be located at both the top and bottom ends **236**,**234** of the staircase **222** to control ingress to and egress from the staircase **222**.

In one embodiment, the body **226** of the staircase **222** might comprise a superstructure which supports the steps **228**. For example, the body **226** might comprise a metal framework. The steps **228** might be constructed from wood and be supported by that framework. In another embodiment, the body **226** might define the steps **228**. For example, the staircase **222** might be constructed from metal, such as step elements which are welded to one another to form a unitary structure.

The mount **224** preferably comprises a robot or robotic arm similar to that described above and will thus not be described herein again in detail (for example, such may comprise a base and a moveable support, as detailed above). In particular, the mount **224** is configured to move the staircase **222** in at least two (2), and preferably three (3) dimensions. As also indicated above, the robotically controlled staircase **220** may also include a controller to move the staircase **222** in certain paths.

As best illustrated in FIG. **7**, the staircase **222** is preferably mounted to the mount **224**. As illustrated, an adaptor **240** may be used to connect the staircase **222** and the robotic mount **224**. The adaptor **240** may have various configurations. FIG. **7** illustrates one configuration in which the adaptor **240** engages a bottom portion of one or more of the steps **228**. However, the adaptor **240** could have other configurations, such as depending upon the configuration of the staircase **222**, including the body **226** or supporting structure thereof.

As illustrated in FIG. **6**, the robotic mount **224** is configured to move the staircase **222** between various positions. For example, the robotic mount **224** may move the staircase **222** into a position in which its bottom end **234** is positioned on the ground. A user may then step onto the staircase **222** from the ground, such as by stepping onto a lower landing **232** thereof.

The robotic mount **224** may then be used to move the staircase **222**, and the user standing thereon, to another location. In the preferred embodiment where the robotic mount **224** can move in three dimensions, the staircase **222** may be moved to various positions in three-dimensional space which vary from an initial or starting position. FIG. **6** illustrates one simplistic embodiment where the staircase **222** is moved in two dimensions: upwardly and forwardly. In this example, the staircase **222** may be moved upwardly and forwardly, such as to dock with a raised platform **262**. A user might then disembark from the staircase **222** onto the platform **262**.

It will be appreciated that a user may climb up and down the steps **228** of the staircase **222** both while the staircase **222** is stationary and/or while it is moving. For example, a user might board the staircase **222** at the bottom end **234** while it is stationary. As the staircase begins to move to a destination, the user might climb the steps **228** to the top end **236** of the staircase **222** to disembark the staircase **222** at the destination.

The robotically controlled staircase **220** might be used in various manners. For example, it might be used in a theater. In such an environment a singer might be transported from stage level to a platform well above stage, or from one location to another over a barrier such as a moat. The robotically controlled staircase **220** might also be used as an amusement ride. In such an embodiment, patrons might board the staircase **220** as a ride and be transported from one location to another. In one preferred embodiment, a haunted house ride might include one or more platforms in various locations. The platforms might lead to doors or other points of entry. Patrons might board the staircase and be transported to one or more of those platforms where they disembark to travel into other portions of the haunted house. In one embodiment, the staircase might move between various locations before stopping, thus providing substantial anticipation to the riders as to their final destination. It is also possible for there to be more than one robotically controlled staircase **220**. The various staircases **220** might move independently between various locations. They might also move so that they join together at certain times (forming longer staircases to connect to various locations, for example) or independently at other times). As yet another example, a first robotically controlled staircase **220** might be used to move patrons from ground level to one or more platforms at a first level (above ground) and then a second robotically controlled staircase **220** might be used to move patrons from the first level to an even higher second level (or higher).

As indicated, one or more controllers may be used to control the robotically controlled staircase **220**, such as to cause it to move between various locations. The patterns of movement may change over time. For example, in a haunted house ride, the robotically controlled staircase **220** might be configured to move a first set of riders from ground level to a first platform. However, the robotically controlled staircase **220** might be configured to move a second set of riders from that same ground level to a second, different platform.

Of course, the robotically controlled staircase **220** might be configured to move between various locations other than ground level and various platforms. The robotically controlled staircase **220** may include various of the other features detailed herein. For example, the robotically controlled staircase **220** may be controlled by one or more controllers, such as to move in certain patterns or paths, including synchronously with other elements. For example, the robotically controlled staircase **220** may be moved synchronously with music which is being played or with images that are being displayed.

In accordance with the invention, a robotic mount is advantageously configured to move one or more entertainment elements, preferably in three-dimensions. The entertainment elements may thus be "animated", providing a much higher level of entertainment value. For example, the movement of one or more video displays adds entertainment value to the information or images displayed by the one or more video displays. Likewise, the movement of one or more video projectors allows the location of projected images to change, thus adding excitement to the images themselves. Similarly, the movement of a staircase may be used to entertain observers or riders of the staircase.

It will be understood that the above described arrangements of apparatus and the method there from are merely illustrative of applications of the principles of this invention and many other embodiments and modifications may be made without departing from the spirit and scope of the invention as defined in the claims.

What is claimed is:

1. A robotically controlled video display system comprising:

a first robotic display comprising:

a first robotic display mount comprising a base and a moveable support, said moveable support having one more portions moveable about at least an x axis, a y axis and a z axis which are perpendicular to one another;

at least one first motor configured to move said moveable support; and

at least one first electronic video projector capable of projecting visual information in response to a video signal input, said at least one first electronic video projector mounted to said moveable support for movement by said first robotic display mount; and

at least a second robotic display comprising:

a second robotic display mount comprising a base and a moveable support, said moveable support having one more portions moveable about at least an x axis, a y axis and a z axis which are perpendicular to one another;

at least one second motor configured to move said moveable support; and

at least one second electronic video projector capable of projecting visual information in response to a video signal input, said at least one second electronic video projector mounted to said moveable support for movement by said second robotic display mount; and

an electronic controller configured to control said at least one first motor and said at least one second motor to move said at least one first and at least one second electronic video projectors independently of one another in the three dimensions about said x axis, said y axis and said z axis, whereby said at least one first and second electronic video projectors may be moved so that they project independent or combined visual information.

2. The robotically controlled video display system in accordance with claim 1 wherein said electronic controller is configured to automatically move said at least one first and at least one second electronic video projectors in a pre-programmed pattern.

3. The robotically controlled video display system in accordance with claim 1 wherein said electronic controller is configured to move said at least one first and said at least one second electronic video projectors synchronously with information displayed by said projectors.

4. The robotically controlled video display system in accordance with claim 1 wherein said first and second robotic display mounts comprise a base and a moveable support connected to said base and moveable relative to said base.

5. The robotically controlled video display system in accordance with claim 1 wherein said at least one first and said at least one second electronic video projectors comprise digital light projectors.

6. The robotically controlled video display system in accordance with claim 1 wherein said electronic controller is configured to move said at least one first and said at least one second electronic video projector synchronously with music.

* * * * *